INSTALLATION GUIDE

LED Bay Light
with Emergency LED Driver

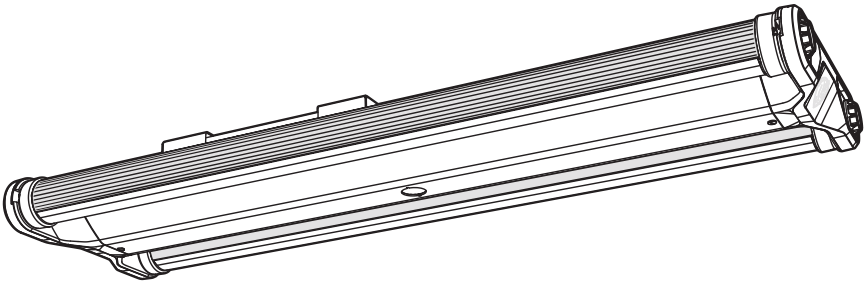

Delta T LLC dba Big Ass Fans

READ AND SAVE THESE INSTRUCTIONS

CAUTION: Risk of electric shock. Disconnect power before servicing. Driver has more than one power source. Disconnect both sources by turning off the AC branch circuit and disconnecting the unit driver connector.

CAUTION: Install luminaire suspension cables correctly. Cables must be taut and secure.

WARNING: This luminiare and emergency LED driver have not been evaluated to NFPA 101 (Life Safety Code) or ISO 30061:2007 (Emergency Lighting).

CAUTION: Risk of electric shock. Complete installation and apply AC power before mating the driver unit connector located on top of the fixture.

The light source contained in this fixture shall only be replaced by the manufacturer or his service agent or a similar qualified person.

Suitable for damp locations.

The product warranty will not cover equipment damage or failure caused by improper installation.

Connection of the product to the mains must be performed by qualified persons in accordance with all applicable codes. Code compliance is your responsibility. Failure to comply with these codes could result in personal injury or property damage.

Maintain reinforced insulation between LV supply and control conductors.

This luminaire must be mounted or supported independently of an outlet box.

Not for use in dwellings.

Fixtures with driver require an unswitched AC power source of 120–277 VAC, 50/60 Hz.

	Power Factor (PF)		Supply Current (A)	
	120 V	**277 V**	**120 V**	**277 V**
24 K	0.997	0.959	1.18	0.52
30 K	0.998	0.972	1.46	0.63
36 K	0.997	0.936	1.86	0.82
48 K	0.998	0.963	2.53	1.11
60 K	0.996	0.923	3.34	1.53
72 K	0.997	0.948	4.19	1.85

Conforms to UL Standard 1598, UL Standard 8750, CSA Standard C22.2 No. 250.0, and CSA Standard C22.2 No. 250.13

This device complies with part 15 of the FCC Rules. Operation is subject to the following two conditions: (1) This device may not cause harmful interference, and (2) this device must accept any interference received, including interference that may cause undesired operation.

www.bigassfans.com/patents ▪ www.bigassfans.com/product-warranties

BAF-DBL1-24xx01yyxxxxxxS1, BAF-DBL1-30xx01yyxxxxxxS1, BAF-DBL1-36xx01yyxxxxxxS1, BAF-DBL1-48xx01yyxxxxxxS1, BAF-DBL1-60xx01yyxxxxxxS1, BAF-DBL1-72xx01yyxxxxxxS1

CABLE MOUNT

A1. Attach the grippers to the tops of the V-hooks.

A2. Insert the V-hooks into the holes on top of the fixture.

A3. Secure the cables to the mounting structure and insert the ends into the grippers. Tighten the allen set screws on the bottoms of the grippers.

Figure A

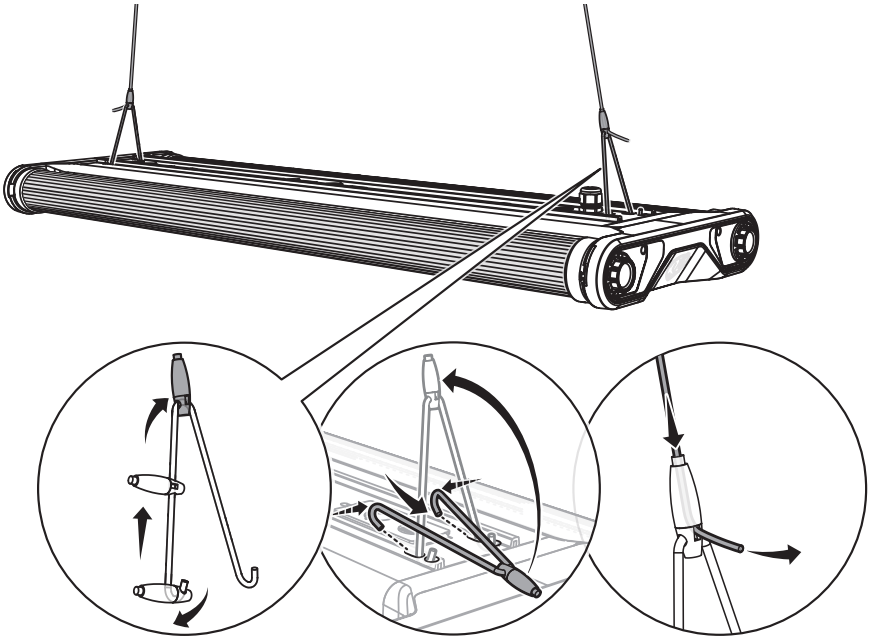

Figure A1 *Figure A2* *Figure A3*

WARNING: Installing light fixtures in an environment where excessive air movement is present can prematurely wear the mounting cable. Big Ass Fans recommends installing a four-point guy wire system to prevent movement of the light fixture.

WARNING: Big Ass Fans does not recommended installing the mounting cable around structure or fasteners that have sharp edges, especially when building vibrations or air movement is present. Installation of wire rope thimbles and eyebolts or quick links is recommended.

© 2019 DELTA T LLC ALL RIGHTS RESERVED.

PENDANT MOUNT

B1. Run the facility power wiring through customer-supplied 3/4 NPT conduit. Connect the wiring to the wires coming out of the conduit hub on top of the fixture, and then connect the conduit to the conduit hub.

B2. Secure the other end of the conduit to the outlet box and connect the wiring.

When finished, complete all Cable Mount steps as shown in Figure A. *The cables are required for supporting the fixture.*

Figure B

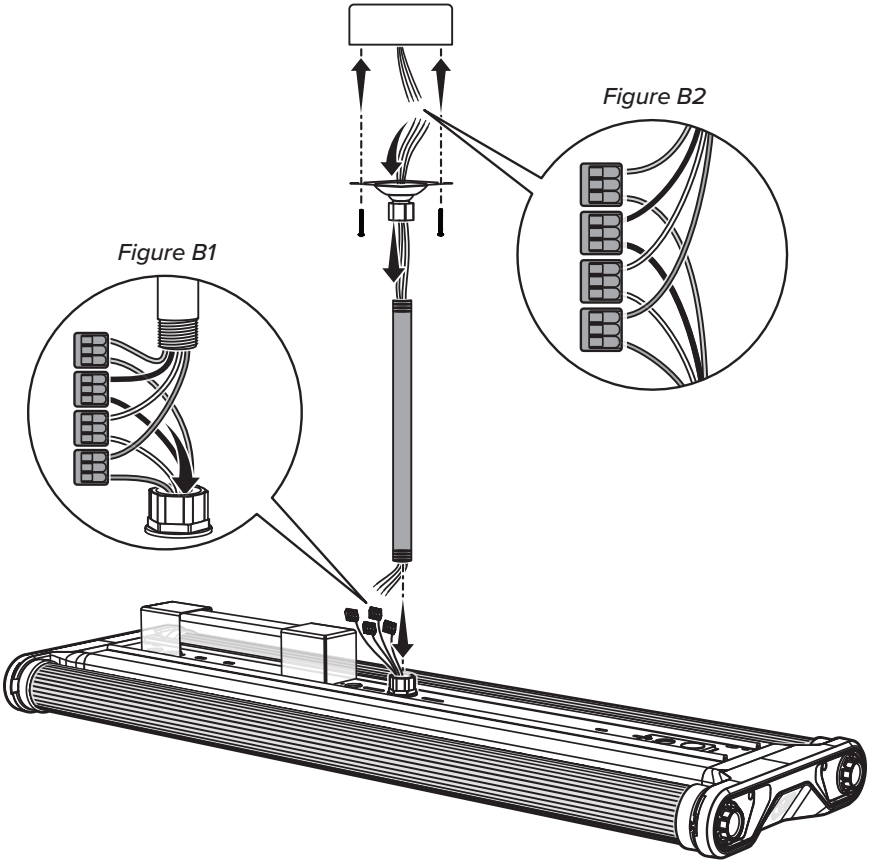

POWER WIRING

Fixtures with an emergency LED driver require an *unswitched* AC power source of 120–277 VAC, 50/60 Hz. Refer to the input voltage rating marked on the fixture, and then wire according to the diagram and table below. *Note: The dimming cable is optional.*

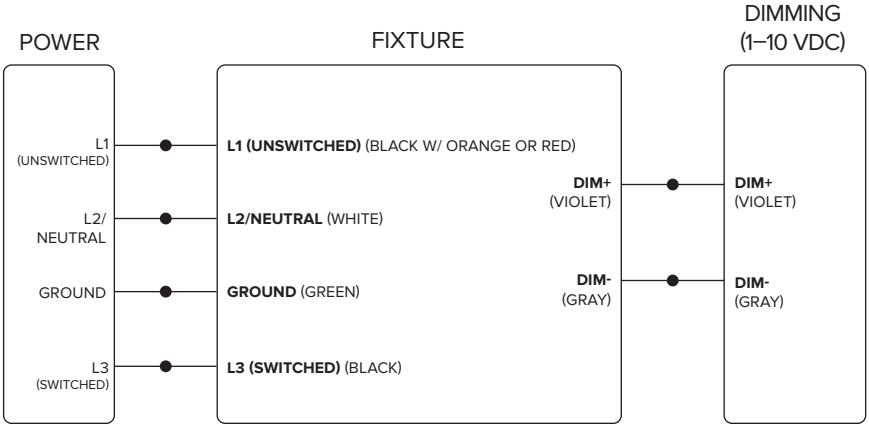

Low voltage fixture (120–277 V ± 15%)

Supply voltage	Fixture's L1 (unswitched) (black w/ orange or red) connects to	Fixture's L2/Neutral (white) connects to	Fixture's L3 (switched) (black) connects to
120 VAC, 1 Φ derived from 1 Φ, 240/120 V panel	H (black)	N (white)	H (black)
208 VAC, 3 Φ derived from 3 Φ, 208/120 V panel	L1 (black), L2 (red), or L3 (blue)	L2 (red), L3 (blue), or L1 (black)	L1 (black), L2 (red), or L3 (blue)
240 VAC, 1 Φ derived from 1 Φ, 240/120 V panel	L1 (black)	L2 (red)	L1 (black)
240 VAC, 1 Φ derived from 3 Φ, 240/120 V panel, B phase wild	L1 (black), L2 (orange), or L3 (blue)	L2 (orange), L3 (blue), or L1 (black)	L1 (black), L2 (orange), or L3 (blue)
277 VAC, 1 Φ derived from 3 Φ, 480/277 V panel	L1 (brown), L2 (orange), or L3 (yellow)	N (white)	L1 (brown), L2 (orange), or L3 (yellow)

© 2019 DELTA T LLC ALL RIGHTS RESERVED.

LIGHT MODULE ROTATION (OPTIONAL)

90° or 180° Rotation (Figure C)

C1. While supporting the light module, use a 9/64 in. allen wrench to turn the screws on both ends of the fixture counterclockwise until they completely back out of the yellow end caps of the light module.

C2. Rotate the light module 90° or 180°.

C3. Turn the screws on the ends of the fixture clockwise to secure them.

45° or 135° Rotation (Figure D)

Remove the fixture end caps by removing the two screws from each end of the fixture and sliding the end caps down and outward.

D1. While supporting the light module, remove the inner screws using a 9/64 in. allen wrench.

D2. Rotate the light module 45° or 135°.

D3. Reinstall the screws in the second holes. Reattach the fixture end caps.

Figure C

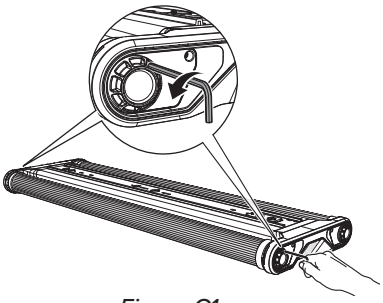

Figure C1

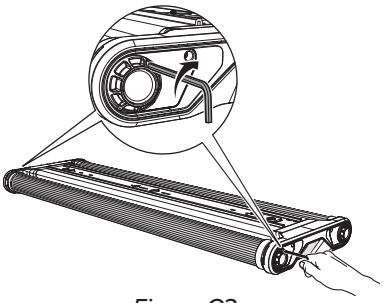

Figure C3

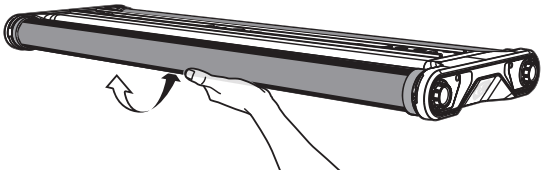

Figure C2

Figure D

Figure D1 *Figure D2* *Figure D3*

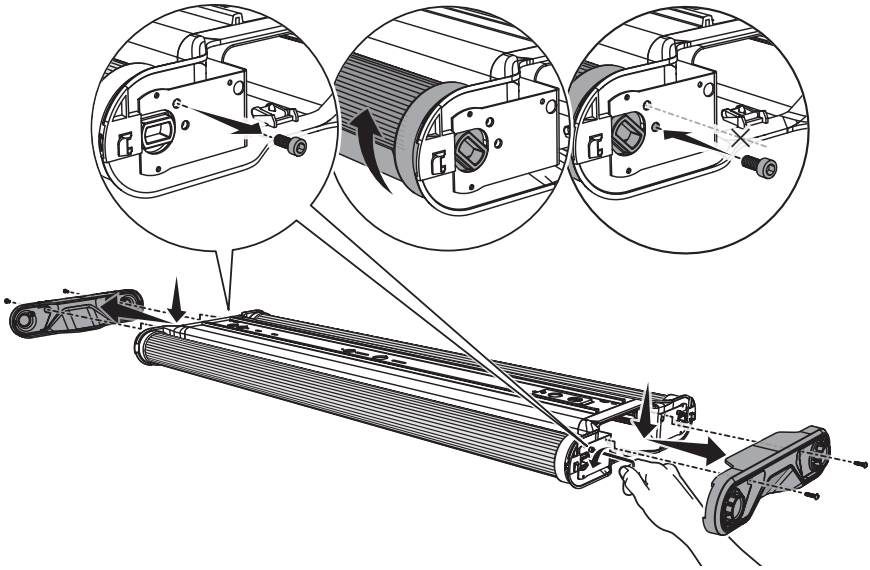

© 2019 DELTA T LLC ALL RIGHTS RESERVED.

CONNECTING THE LED DRIVER

⚠ **CAUTION: To prevent electrical shock, do not mate the unit connector until installation is complete and AC power is applied to the unit.**

E1. After installation is complete, turn on AC power, and then join the driver unit connector on top of the fixture.

E2. Push the unit connector and wiring into the hole.

E3. Snap the red button into the hole. Make sure the button is illuminated. This indicates the driver is charging.

Figure E

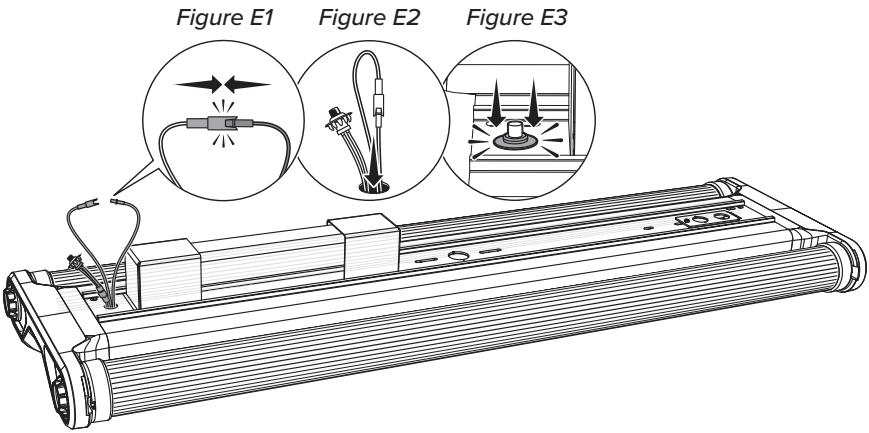

TESTING THE LED DRIVER

Allow the driver battery to charge for one hour, and then press and hold the button to conduct an initial emergency lighting test. The light should turn off and half of the LEDs should illuminate at a dim level.

Allow the battery to charge for 24 hours, and then switch off AC power at the circuit breaker to simulate a blackout. Make sure half of the LEDs operate at a dim level for 90 minutes.

MAINTENANCE

Electrical preventive maintenance

Big Ass Fans suggests an electrical preventive maintenance program similar to that described in *NFPA 70B: Recommended Practice For Electrical Equipment Maintenance* by the National Fire Protection Association.

Cord safety

If the external flexible cable or cord of this luminaire is damaged, it shall be exclusively replaced by Big Ass Fans or a Big Ass Fans service agent or a similar qualified person in order to avoid a hazard. For assistance, please contact Customer Service.

Emergency lighting testing

Test emergency lighting as described in *NFPA 101: Life Safety Code*. Keep written records of testing and make sure inspections are performed regularly.

Monthly. Conduct a 30-second emergency lighting test. Press and hold the red, illuminated button on top of the fixture for 30 seconds. Make sure half of the LEDs operate at a dim level for the entire 30 seconds.

Annually. Conduct a 90-minute emergency lighting test. Switch off AC power at the circuit breaker to simulate a blackout. Make sure half of the LEDs operate at a dim level for 90 minutes.

Cleaning the lenses

Do not clean the fixture—especially the lenses—with scouring pads, alkaline cleaning substances, gasoline, thinner, benzene, heating oil, or polishing powder. Do not pressure wash or use a water hose to clean the fixture.

Clean the lenses periodically to ensure optimal performance. Remove lenses and wipe with a clean, damp cloth. Allow to dry thoroughly before replacing. If necessary, use a mild soap or a gentle liquid cleaner.

© 2019 DELTA T LLC ALL RIGHTS RESERVED.

Removing and replacing the lenses

The lenses are designed to be removable for cleaning or replacement. *Handle lenses with care.*

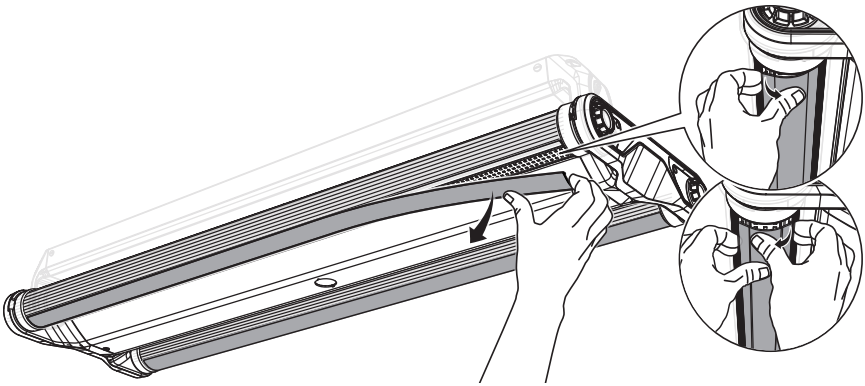

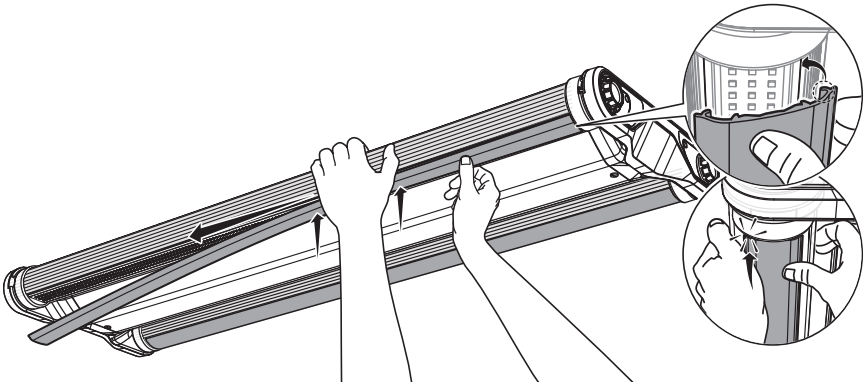

OCCUPANCY SENSOR DEFAULT SETTINGS

High Mode	10 V
Low Mode	Off
Time Delay	10 min
Cut Off	Disabled
Sensitivity	Max
Setpoint	Disabled
Ramp Up	Disabled
Ramp Down	Disabled
Photocell	Disabled

To modify settings, see the handheld remote user guide.

bigassfans.com/docs/lighting/occ-sensor-remote-user-guide.pdf

CONTACT US

United States
2348 Innovation Drive
Lexington, KY 40511
USA
877-244-3267
Outside the U.S. (+1 859-233-1271)
bigassfans.com

Australia
35 French Street
Eagle Farm, Brisbane
QLD 4009
Australia
+61 1300 244 277
bigassfans.com/au

Malaysia
BAFCO Asia Sdn Bhd (965032-V)
No 4, Jalan Jururancang U1/21A
Hicom Glenmarie Industrial Park
40150 Shah Alam, Selangor,
Malaysia
(+603) 5565 0888

Manufacturer
2348 Innovation Drive
Lexington, KY 40511
USA

Warranty and WEEE Returns
2251 Innovation Drive
Lexington, KY 40511
USA

Manufacturing Site
2251 Innovation Drive
Lexington, KY 40511
USA

Canada
2180 Winston Park Drive
Oakville, Ontario L6H 5W1
Canada
1 844-924-4277
bigassfans.com

Singapore
18 Tampines Industrial Crescent #06-07
Singapore 528 605
+65 6709 8500
bigassfans.com/sg

Mexico
CEBSA (Corporación Eléctrica del
Bravo SA de CV)
Avenida Ind. Rio San Juan
Lote 3-A Parque Industrial del Norte
Reynosa, Tamps C.P. 88736
+52 1 899 925 6398
http://cebsainc.com/

EC REP
Obelis s.a.
Boulevard Général Wahis 53
B - 1030 Brussels, Belgium
www.obelis.net
Tel: +32.2.732.59.54
Fax: +322.732.60.03
E-mail: mail@obelis.net

All Other Geographies
+1 859-410-6286
bigassfans.com

LTG-INST-264-MUL-01
REV C
01/21/2020

BIG ASS FANS®

2251 Innovation Drive, Lexington, KY 40511
1 (877) BIG-FANS | WWW.BIGASSFANS.COM